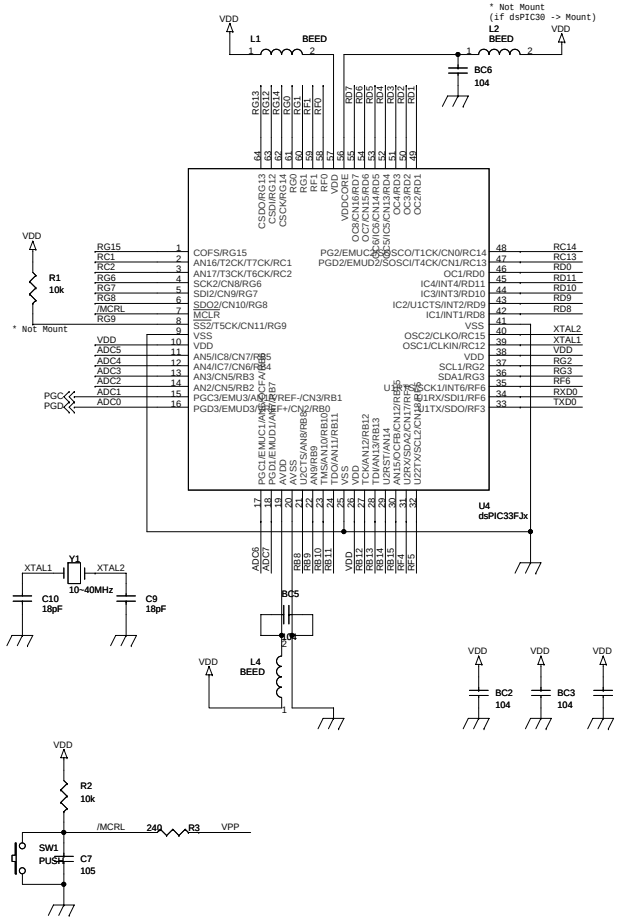

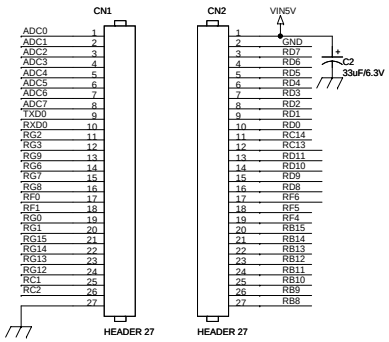

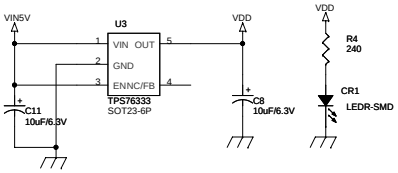

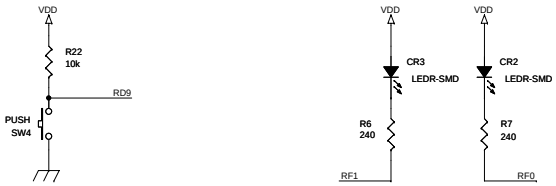

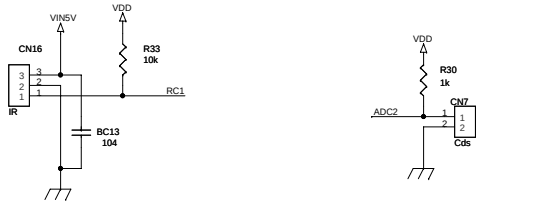

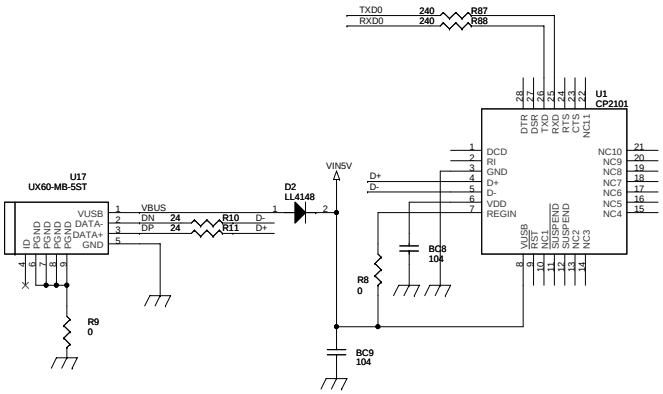

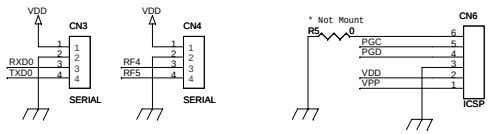

Title	[dsPIC33 EVM] rev2 Board	
Size C	Document Number <Doc>	Rev 0.2
Date: Tuesday, April 29, 2008	Sheet 1 of 1	